Project Report

CSE461: Introduction to Robotics

Project title: Gardening system

Section: 05

Group: 04

Group Members:

Nuhash Kabir Neeha, ID:21301025

Tasnim Rahman, ID:21201114

Juaria Tahsin, ID:23241054

Jahidul Hassan Rifat, ID:21201300

Aarshi Durriya Raihan, ID:22101546

Introduction

Maintaining a garden and mowing the lawn is a time consuming and tedious task. The mix between technology and gardening presents a strong chance to change the old days' gardening techniques. Our project tried to showcase such a robot that is an assimilation between technology and gardening by implementing a smart gardening system.
This UGV bot integrates multiple sensors to sense moisture levels, temperature, humidity and so on and can be controlled by smartphone through bluetooth connectivity. This robot is made to be a sustainable, convenient, efficient and environmentally conscious way to deal with law maintenance.

Purpose

The purpose of this gardening system is to make the various tasks that are involved in gardening, such as watering, cutting, and monitoring plant health more efficient and easily executable without the exertion of physical labor. Our robot ensures that gardening is super easy and accessible to users.

Components:

- Arduino uno R3
- Relay mod 2 channel -80
- Servo motor SG90-2 ta-200
- battery 4+ battery holder-380
- Wire
- LCD Module with 12c interface: 16*2-230
- Breadboard
- 5v water pump
- Soil moisture sensor
- Temperature sensor
- Buck module-50

- Bluetooth mod-250

Planning and Design

Our plan was to make the robot move, so we laid out a blueprint to make it resemble a four wheeler car. The ultimate design of the robot included a PVC board to mimic the body of a car. The PVC board has four movable wheels attached to it, and on top of the PVC board, all the components that make up our system is laid out, which include our single board computer (arduino), sensors(moisture and temperature), the batteries, motors (motor to move the wheels and servo motors for water dispensing and for soil moisture sensing), and the screen to view the output from our sensors.

The robot also has a bluetooth module attached to the board so it can connect to our cell phones which will act as the remote.

Changes made compared to the original design:

- Batteries with a total of 12V
- 1 Arduino for wheel movement and grass cutting
- 1 Arduino for sensing temperature and moisture and operating the water pump
- Buck module converts 12V into 5V
- 2 Motor drivers for wheel movement and grass cutting
- 1 Relay module for water pump
- Breadboard for connecting all the components together
- 1 servo motor to move the moisture sensor (90 degrees)
- 1 servo motor for moving the water pump (30 degrees clockwise and anti clockwise)

Schematic diagram of the bluetooth controlled car body and the cutter:

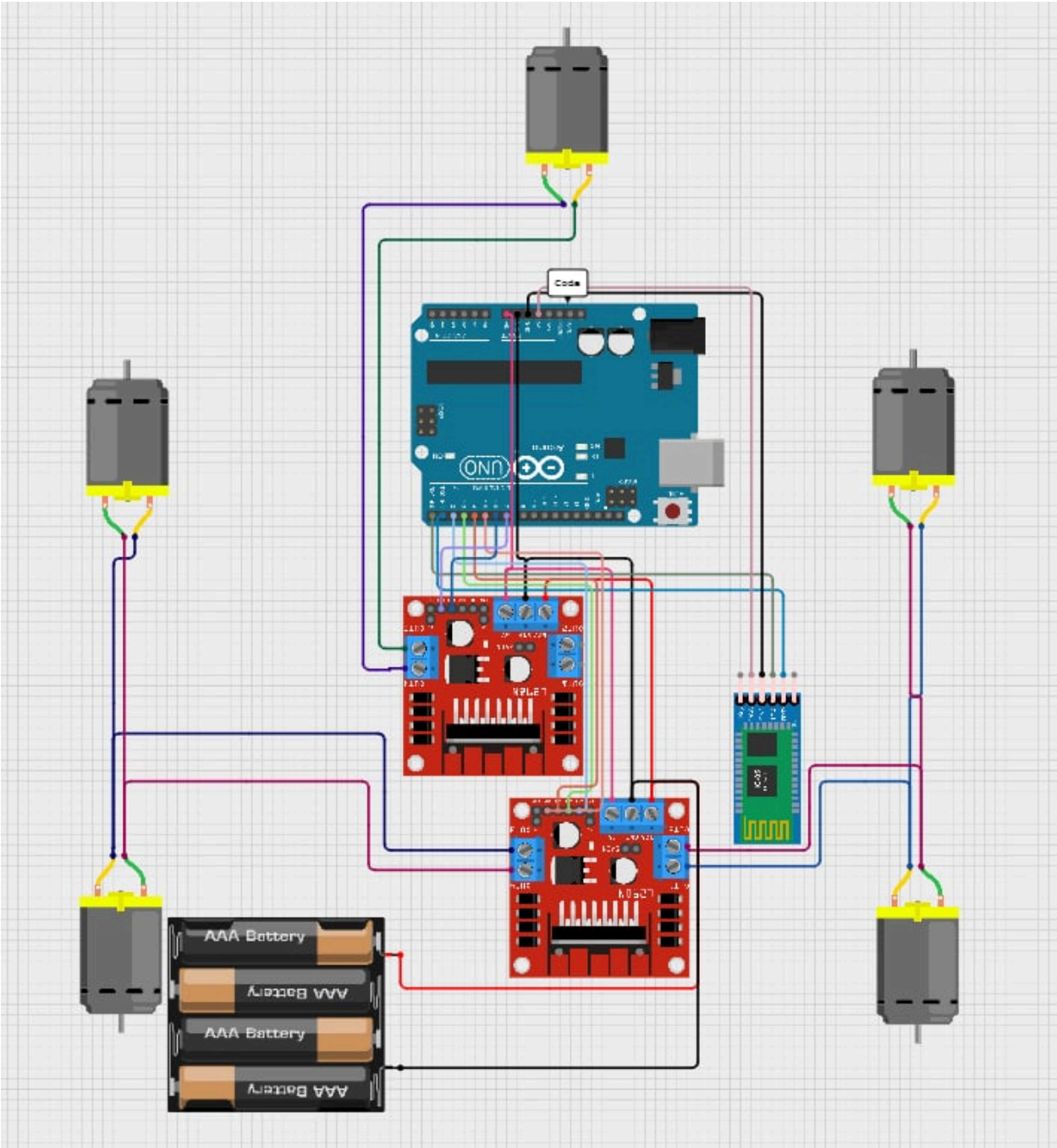

The following documented code for the bluetooth controlled car and cutter:

```
int motora_in1 = 2;
int motora_in2 = 3;
int motorb_in3 = 4;
int motorb_in4 = 5;
int motorc_in3 = 6;
int motorc_in4 = 7;

char sms;

void setup() {
  Serial.begin(9600);
  pinMode(motora_in1, OUTPUT);
  pinMode(motora_in2, OUTPUT);
  pinMode(motorb_in3, OUTPUT);
  pinMode(motorb_in4, OUTPUT);
  pinMode(motorc_in3, OUTPUT);
  pinMode(motorc_in4, OUTPUT);
}

void loop() {
  // Check if there's data available to read from the serial
port
  if (Serial.available()) {
    // Read the incoming character
    sms = Serial.read();
  }

  // Process the received command
  if (sms == 'S') {
    stop();
  }
  else if (sms == 'F') {
    forward();
```

```
  }
  else if (sms == 'B') {
    backward();
  }
  else if (sms == 'R') {
    right();
  }
  else if (sms == 'L') {
    left();
  }
  else if (sms ==  'V') {
    cut();
  }
  else if (sms ==  'v') {
    stopcutter();
  }
  // Add an else block for error handling if needed
}

// Function to move forward
void forward() {
  digitalWrite(motora_in1, HIGH);
  digitalWrite(motora_in2, LOW);
  digitalWrite(motorb_in3, HIGH);
  digitalWrite(motorb_in4, LOW);
}

// Function to move backward
void backward() {
  digitalWrite(motora_in1, LOW);
  digitalWrite(motora_in2, HIGH);
  digitalWrite(motorb_in3, LOW);
  digitalWrite(motorb_in4, HIGH);
}
```

```
// Function to turn right

ivoid right() {
  digitalWrite(motora_in1, LOW);
  digitalWrite(motora_in2, LOW);
  digitalWrite(motorb_in3, HIGH);
  digitalWrite(motorb_in4, LOW);
}

// Function to turn left
void left() {
  digitalWrite(motora_in1, HIGH);
  digitalWrite(motora_in2, LOW);
  digitalWrite(motorb_in3, LOW);
  digitalWrite(motorb_in4, LOW);
}

// Function to stop
void stop() {
  digitalWrite(motora_in1, LOW);
  digitalWrite(motora_in2, LOW);
  digitalWrite(motorb_in3, LOW);
  digitalWrite(motorb_in4, LOW);
}

//Function to cut
void cut() {
  digitalWrite(motorc_in3, HIGH);
  digitalWrite(motorc_in4, LOW);
}
void stopcutter() {
  digitalWrite(motorc_in3, LOW);
```

```
  digitalWrite(motorc_in4, LOW);
}
```

Schematic diagram of the DHT11 and soil moisture sensor and automated water pump:

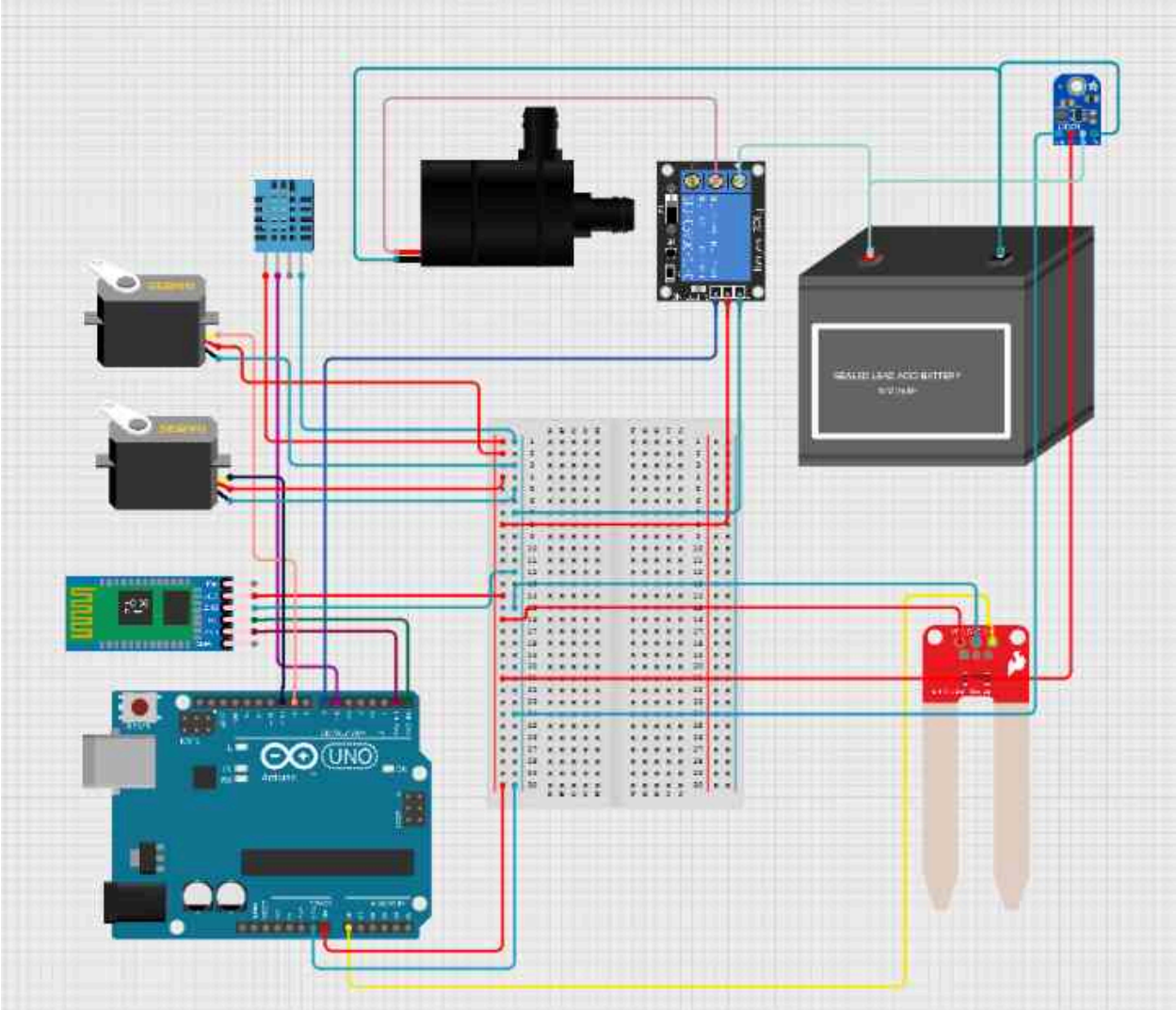

The following documented code for the DHT11(temperature sensor) and soil moisture sensor and automated water pump:

```
#include <Servo.h>
#include "DHT.h"


#define DHTPIN 6
#define DHTTYPE DHT11   // DHT 11
```

```
DHT dht(DHTPIN, DHTTYPE);

Servo servoMotor1;
Servo servoMotor2;
int servoPin1 = 9;
int servoPin2 = 10;
int soilSensorPin = A0;
int pumpPin = 7;
char command = '0';
int soilMoisture;
int servoPos = 60; // Initial command is '0' to set the servo to 0 degrees

void setup() {
  servoMotor1.attach(servoPin1);
  servoMotor2.attach(servoPin2);
  pinMode(soilSensorPin, INPUT);
  pinMode(pumpPin, OUTPUT);
  dht.begin();
  digitalWrite(pumpPin, HIGH); // Initialize pump pin to OFF state
  Serial.begin(9600); // Initialize serial communication
  Serial.setTimeout(100); // Set timeout for serial communication
}

void loop() {
  float h = dht.readHumidity();
  float t = dht.readTemperature();
  Serial.print("Humidity: ");
  Serial.print(h);
  Serial.println("%");
  Serial.print("Temperature: ");
```

```
Serial.print(t);
Serial.println("C");
delay(2000);

if (Serial.available() > 0) {
  command = Serial.read(); // Read the incoming byte
  Serial.println(command); // Print the received command

  // Process the command received from Serial
  if (command == '1') {
    servoMotor1.write(90);
    soilMoisture = analogRead(soilSensorPin);
    Serial.print("Soil Moisture Level: ");
    Serial.println(soilMoisture);

    if (soilMoisture > 700) { // Adjust threshold as needed
      digitalWrite(pumpPin, LOW); // Turn on water pump
      servoMotor2.attach(servoPin2); // Attach the second servo
      for(int i = 0; i < 20; i++) { // Move servo left and right by 30 degrees
        servoMotor2.write(0); // Move servo left
        delay(200); // Delay to see the movement
        servoMotor2.write(30); // Move servo right
        delay(200); // Delay to see the movement
      }
      servoMotor2.detach(); // Stop the second servo
      Serial.println("Soil moisture is low. Pump turned on.");
    } else {
      Serial.println("Soil moisture is sufficient. Pump remains off.");
    }
  } else if (command == '0') {
```

```
      servoMotor1.write(0); // Move the first servo to 0 degrees
      digitalWrite(pumpPin, HIGH); // Turn off water pump
      servoMotor2.detach(); // Stop the second servo
      Serial.println("Servo and pump turned off.");
    }
  }
}
```

Testing And Result Analysis:

Robot car and cutter:

- Tested if all the motors work by connecting the power supply to the wires manually.
    - Analysis: one motor stopped working; hence, had to be replaced
- Connected the motors on each side of the car in series and tested if both sides' wheels rotate clockwise when connected to the correct polarity of the power supply.
    - Analysis: the first time around the motors were connected opposite to other another to the motor driver; hence, one side of the car was going forward(wheel were rotating clockwise) and the other side was going backwards(wheels were rotating anticlockwise) stopping the car from moving and connection shad to be reversed in the motor driver.
- Tested if the bluetooth module works by connecting it to the phone.
    - Analysis: was successfully connected to the phone and worked without any problems
- If the power supply is enough to power both the motor drivers and bluetooth module and the arduino.
    - Analysis: the power sully did power both the motor and bluetooth module but it was not enough to power the arduino; hence, the arduino has to be controlled through an external power source(i.e. Power bank)
- Tested weather the temperature sensor was giving correct readings

    - Analysis: the fist temperature sensor was working at first but somehow burned through wrong connections. Thus, had to be replaced; then gave correct reading.
- Tested the moisture sensor using a small pot of soil, just water and held in air.
    - Analysis: the moisture sensor was first tested if it is giving any reading and when it showed it was alright it was connected to the water pump and tested if the coding and if the arduino was being programmed correctly. At the beginning the water pump would turn on when the sensor was in air as it did not detect much moisture but did not turn the pump off when it was dipped in water. The sensor had to be connected and tested multiple times to find the range of the moisture being detected by the moisture sensor.
- Tested servo motors if there working correctly
    - Analysis: one of the servo motors worked but its connection was loose so it would stop working in the middle of testing and had to be changed. Both the servo motors were tested and both worked correctly and after programming it to the proper angle of rotation of both the servos all the sensors worked correctly.

Future Enhancements:

The robot can be armed with advanced AI programmes to be able to adapt to changing weather conditions. Better way of watering the lawn can be implemented. AI can also be used to make the bot mow the lawn in certain patterns selected and controlled by the operator through bluetooth or wifi. Bluetooth can be switched out for wifi with iot could connection, for the bot to be more. Efficient. Additionally, it can be equipped with ultrasonic sensors or lidars to detect obstacles (i.e. rocks, debris, small animals) and avoid them. Furthermore, it can be programmed to clean the cut weed and for planting seeds as well. Also, it can be

integrated with smart home systems to be voice controlled handsfree. Finally, it can also be equipped with an AI mapping feature to map and navigate through new terrain for better and more efficient coverage.

Challenges faced:

- Bluetooth module wasn't connecting
- Moisture sensor movement with servo motor had an issue
- Some components have been damaged and need replacement
- ESP32 have been damaged (was to be used for iot connection; bluetooth module used instead)
- Debugging - didn't get output through single computer
- Code wasn't working after merging
- Power supply wasn't enough to power the arduino.
- As a lot of sensors and materials were burned in the process of testing grass length detection could not be achieved

Conclusion:

In order to revolutionize the old ways of gardening techniques, our project introduces a smart gardening system in the form of a UGV. We aimed to alleviate the time consuming and labor intensive work of maintaining one's lawn. By using different sensors and letting people control it with their phones, our bot shows how easy gardening can be and more eco-friendly, as well as time efficient. Our bot can be further enhanced in many different ways for better lawn maintenance by eliminating the physical exertion associated with traditional gardening. Our project aims to make gardening easier and more efficient and accessible for users of all backgrounds. It also has a broad scope of being better. The whole journey of our bot from planning to execution showcases that the amalgamation of technology and gardening holds a lot of potential for innovation and societal as well as environmental benefits.

Video Presentation:

Robot Demonstration

Project Components

User Manual:

User Manual for the car and cutter

User manual for the DHT11(temperature sensor) and soil moisture sensor and automat…

References:

https://www.youtube.com/watch?v=hpWdY6O2HKY&list=PL7euiE97qGc0QbibUmHn5MBrF2V7w3NDa&index=27

https://www.youtube.com/watch?v=TO5t5v5Z5ls&list=PL7euiE97qGc0QbibUmHn5MBrF2V7w3NDa&index=28

https://youtu.be/hL0sk0_HNaA?si=VRkyca4AIDtJn4mU

https://www.instructables.com/Arduino-Bluetooth-Controlled-Robot-Car-1/